UNIT DESCRIPTION	
MODEL #	T2-DX-3PH
WEIGHT	720 lb
DISCHARGE DIRECTION	DOWN
AIRFLOW (CFM)	3000
EXTERNAL SP	.25
TOTAL SP	1.91
FAN BHP	1.59
FAN RPM	1154
MOTOR HP	2 HP
HEATING TYPE	DIRECT GAS FIRED
FUEL TYPE	NATURAL GAS
INPUT (MBH)	264
OUTPUT (MBH)	243
POWER SUPPLY	208/3/60
FLA (AMPS)	10.5
MCA (AMPS)	12.4
MOP (AMPS)	15
SELECTION DATA	
AIRFLOW	3000 CFM
ELEVATION	1033 FT
ENTERING DB/WB	93.9°F / 74.8°F
REQ'D LEAVING AIR DB/WB	0°F / 0°F
REQ'D CAPACITY	90 MBH
COILS PER BANK	1
FIN TYPE	5/8" 1.5" X 1.299" WAFFLE
FIN HEIGHT	24"
FIN LENGTH	34"
FIN MATERIAL	ALUMINUM .006 in.
TUBE MATERIAL	COPPER 0.020 in.
REFRIGERANT	R454b
LIQUID TEMP	110°F
EVAP. TEMP	56°F
LEAVING SUPERHEAT	5°F
COIL CIRCUITING	INTERLACE 2 CIRCUIT
COIL HAND	RIGHT HAND
CASING MATERIAL	16 ga. GALVANIZED
CONNECTION MATERIAL	COPPER
CONNECTION TYPE	SWT
COIL COATING	NONE
PERFORMANCE DATA	
MODEL	DXC03C13-24.00 X 34.00R
ROWS/FBI	3 / 13.0
TOTAL CAPACITY	91.3 MBH
SENSIBLE CAPACITY	72.0 MBH
LEAVING AIR DB/WB	72.2°F / 67.1°F
FACE VELOCITY	529.41 FPM
REFRIGERANT CHARGE	3.03 lbs
AIR PRESSURE DROP	0.46" WC
REFRIGERANT PRESSURE DROP	2.16 PSI
TOTAL FEEDS	4 FEEDS
TUBE VAPOR VELOCITY	1468 FPM
SUCTION CONNECTION	.875"
SUCTION LINE VELOCITY	1948 FPM
DISTRIBUTOR #1	501-2-1/4-2.5
DISTRIBUTOR #2	501-2-1/4-2.5
HOT GAS BYPASS CONNECTION	(1)PER DISTRIBUTOR
DRY WEIGHT	67.8 lbs.

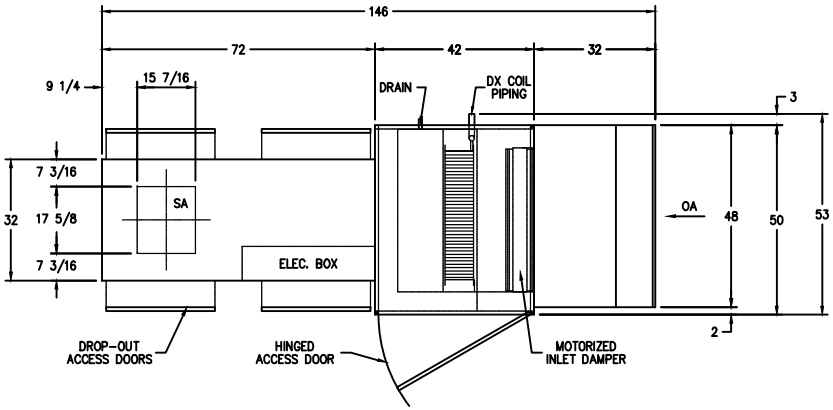

PLAN VIEW

(COIL/CONDENSER PIPING NOT SHOWN)

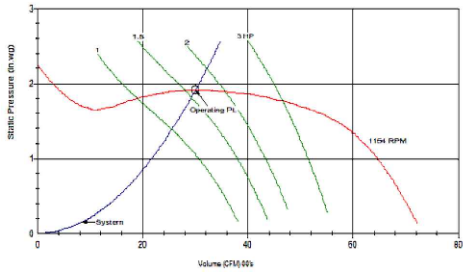

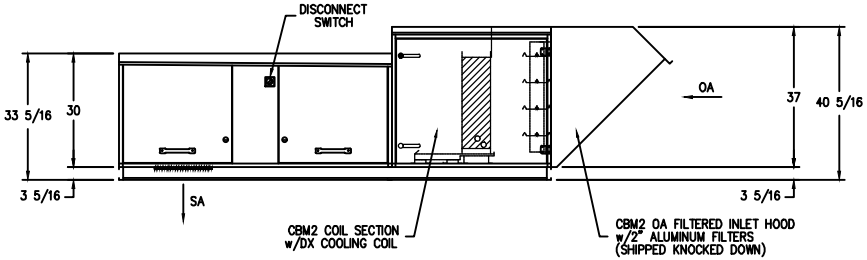

CONTROLS SIDE VIEW

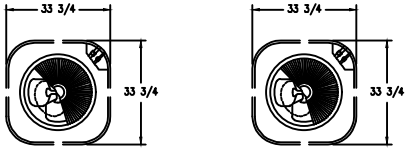

PLAN VIEW - CONDENSERS (SHIPPED LOOSE)

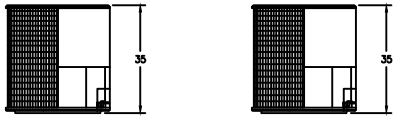

SIDE VIEW - CONDENSERS (SHIPPED LOOSE)

(1) 3.5-TON CONDENSER #1; APPROX. 252 LBS. (1) 4-TON CONDENSER #2; APPROX. 243 LBS.

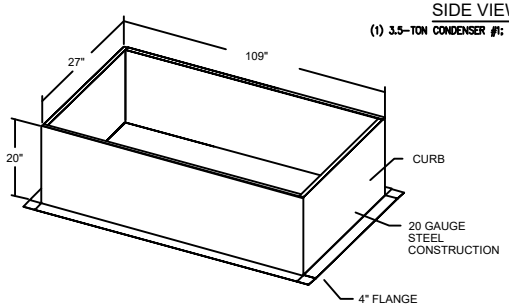

"IT IS THE RESPONSIBILITY OF THE ARCHITECT/OWNER TO ENSURE THAT THE HOOD CLEARANCE FROM LIMITED-COMBUSTIBLE MATERIALS IS IN COMPLIANCE WITH LOCAL CODE REQUIREMENTS

"ALL EQUIPMENT IS UL LISTED COMPONENTS"
NAKS HOODS ARE BUILT IN COMPLIANCE WITH :
NFPA #96 & UL710
AND ARE RECOGNIZED BY ONE OR MORE OF THE FOLLOWING: - NSF INTERNATIONAL -UL
-OPENINGS ARE RECOMMENDED SIZES, DUCT OPENINGS TO BE CUT AND DUCTS INSTALLED IN FIELD

FAN UNIT NO.	FAN UNIT MODEL #	EXHAUST FAN									SUPPLY FAN									
		MODEL	TAG	CFM	S.P.	RPM	H.P.	Ø	VOLT	FLA	BLOWER	HOUSING	TAG	CFM	S.P.	RPM	H.P.	Ø	VOLT	FLA
-	T2-DX SF-1	-	-	-	-	-	-	-	-	-	-	T2-DX	SF-1	3000	0.25	1154	2.0	3	230	-

REVISIONS

NORTH AMERICAN KITCHEN SOLUTIONS INCORPORATED

572 REASER COURT ELYRIA, OHIO 44035 TOLL FREE : 1-800-854-5267 FAX: 440-885-2930

EQUIPMENT SCHEDULE

T2-DX

CONTRACT NO. - ITEM NO. -

JOB: -
LOC: -
CUST. -
CUST.# -

SCALE: AS NOTED
DRAWN BY: -
CHECKED BY: -

DWG# -

SHT - OF -